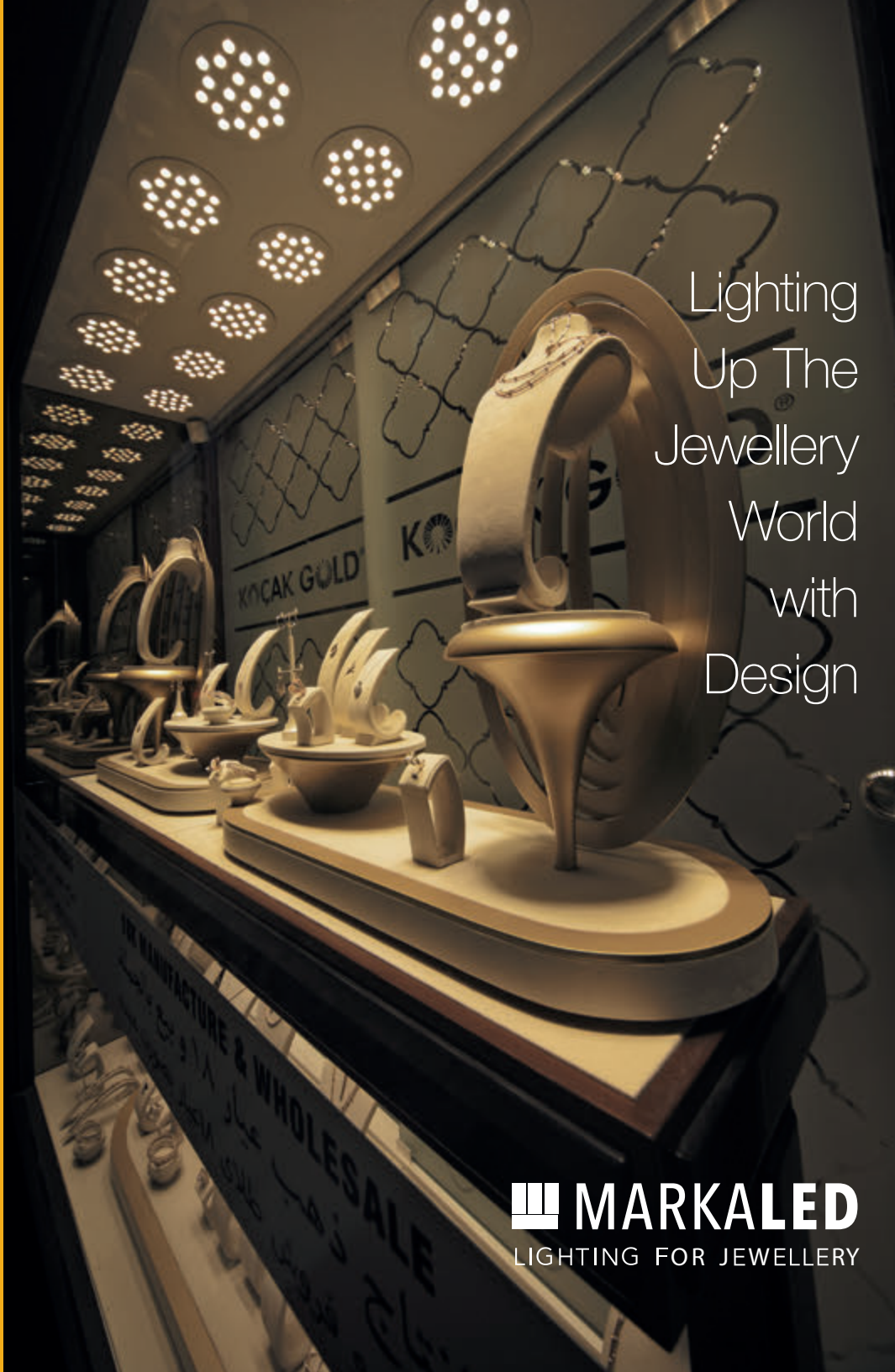

Lighting Up The Jewellery World with Design

MARKALED

LIGHTING FOR JEWELLERY



MARKALED
LIGHTING FOR JEWELLERY

Lighting Up The Jewellery World with Design

MARKALED

LIGHTING FOR JEWELLERY

Content

Company Profile and Application Photos		3-15
MarkaLED's Certificates		16
Product Features at A Glance		18-19
Products and Technical Details		20-22
Products		
	New Release	
	Rotate Light	23
	Spark Recta **Smart**	24
	Spark HPS **Smart**	25
	Spark RPS **Smart**	26
	Anti-Glare Series	
	Recta Anti-Glare	27
	HPS Anti-Glare	28-29
	RPS Anti-Glare	30-33
	Recta Series	34-35
	SparkLED Series	
	SparkLED RPS-HPS	36
	SparkLED Recta-RPS16	37
	Natt Series	38-39
	Kiklop48 / Kiklop24	40
	Ruut24 / Ruut12	41
	Lagra / Lagramet	42
	MalmS	43
	Castor	43
	Lina Series	44-45
	HPS Series	46-47
	RPS Series	48-51
	Inox Series	52
	Showcase / Cabinet Lightings	
	Goalposts	53
	Hatlight 5 / Hanlight	54
	Hatlight / Uplight	55
	Linear Profiles Series	
	Lina Opaque (Linear Profile)	56
	SLP (Stable Linear Profile)	56
	MLP (Movable Linear Profile)	57
	Downlight Series	
	Tratt	58
	Blanda	58
	Lins	59
	Parla	59
	DWL Series	60-61
	ColorMix For Zultanite Stone	62
	Fingerlight	62
Contact Us: Branches and Headquarter		64

Who Is MarkaLED?

MarkaLED is Nr. 1 producer and provider of LED armatures for jewellers in Turkey and expands its business all around the world into new territories.

Why MarkaLED?

MarkaLED is a pioneer, a leader and a trendsetter in the jewellers' lighting market in Turkey, Europe, Middle East, and North Africa. Since 2009, MarkaLED has been a reliable business-to-business partner. MarkaLED has been doing business with 80 countries and accomplished 14.879 projects so far.

How Is MarkaLED Operating?

MarkaLED designs its own products, manufactures them and applies them on-site. Prior to the application phase, it will consult its clients regarding their

- marketing objectives
- interior qualities
- product range in their shops, in particular jewellery, whether they are made of gemstones, silver, gold, or diamond; classic or modern style.

Why LED Armatures?

More and more business owners in various sectors are changing their conventional lighting to LED armatures. As a result, they save up to 90% in lighting costs per year and attract more customers with their well-lit shop windows, interiors, and exteriors.

In Short...

MarkaLED proudly announces that, thank to its knowledge in lighting—gained through actual experience by its dedicated designers, engineers and sales people, it delivers innovative solutions to both national and international market needs. Considering all business aspects, none can come close to MarkaLED.





MARKALED
LIGHTING FOR JEWELLERY


ARIS
ARIS


Altınbaş


ATASAY
1937




HPS25 page 46


14
ŞUBAT

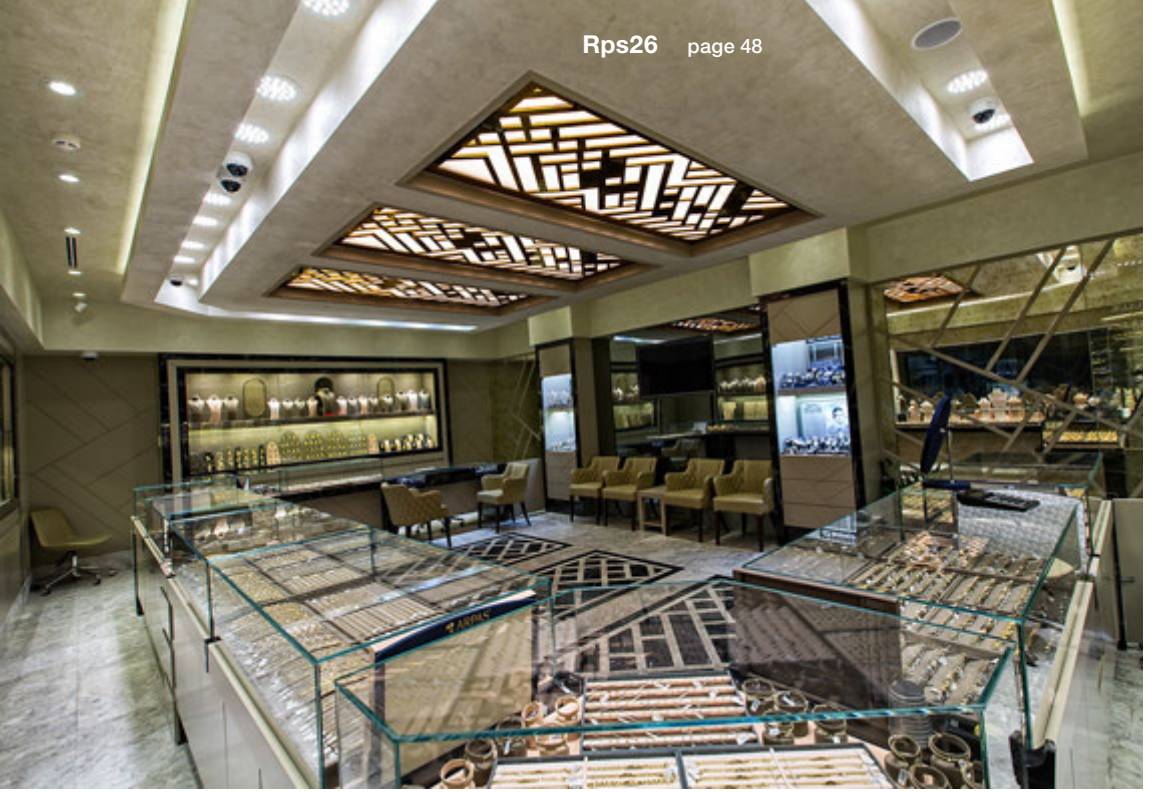

Rps26 page 48



Recta28 page 34



RPS5 page 50



Recta28 page 34




KOÇAK
KOÇAK
Sonbahar Rüzgarı
YAKUT SET — 3890 TL
SAFİR SET — 3890 TL
ZÜMRÜT SET — 4390 TL


GOLD
KOÇAK GOLD
Açılışa Özel
İSİMLİ ALTIN KOLYE
HEDİYE

MarkaLED's Certificates



Products and Technical Details

Product Features at A Glance



Products

CODES	01	02	03	04	05	06	07
	6500 K	5500 K 6500K+4500K	5000 K	4500 K 6500K+3000K	4000 K	3700 K 4500K+3000K	3000 K
Chameleon	Adjustable Color Temperature 2700 to 6500 K						
Recta28/23/14	●	●	●	●	●	●	●
SparkLED RPS/HPS/RECTA	Special Color Options						
NattHP4/3/2/1	●	●	●	●	●	●	●
Kiklop48/24 TRACKLIGHT	●	●	●	●	●	●	●
Ruut24/12 TRACKLIGHT	●	●	●	●	●	●	●
Lagra	●		●		●		●
LagraMet	●	●	●	●	●	●	●
MalmS	●		●		●		●
Castor	●	●	●	●	●	●	●
Lina12WM/6RC/5RC/3RC	●	●	●	●	●	●	●
HPS25/16/9/4	●	●	●	●	●	●	●
RPS26/20/16/12/9/5/4/4D	●	●	●	●	●	●	●
INOX26R/16R	●	●	●	●	●	●	●
GOALPOSTS	●	●	●	●	●	●	●
Hatlight5/3/1	●		●		●		●
Uplight	●		●		●		●
Lina Opaque (Linear Profile)	●	●	●	●	●	●	●
SLP (Stable Linear Profile)	●	●	●	●	●	●	●
MLP (Movable Linear Profile)	●	●	●	●	●	●	●
Tratt	●		●		●		●
Blanda	●		●		●		●
Lins	●		●		●		●
Parla	●		●		●		●
DWL8/6/4/3	●		●		●		●
ColorMix	Special Color Options						
Fingerlight	●		●		●		●

Our Bin-Code System:

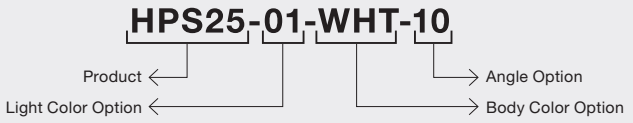

Body Color Options


White


Black


Chrome


Brushed


Gold


Ral Colours

Beam Angle Options


10° 25° 40° 60°

WHT	BLK	CHR	BRS	GLD	RAL	10	25	40	60
○	●	●	▨	●	●	●	●	●	●
○	●	●	▨	●	●	●	●	●	●
○	●	●	▨	●	●	●	●	●	●
○	●						●	●	
○	●						●	●	
○	●	●	▨	●	●	●	●	●	●
○	●						●	●	●
○	●						●	●	
○	●			●	●	●	●	●	●
○	●	●		●	●		●	●	
○	●			●	●	●	●	●	●
○	●	●	▨	●	●	●	●	●	●
○	●	●	▨	●	●	●	●	●	●
○	●	●	▨	●	●	●	●	●	●
○	●	●	▨	●	●	●	●	●	●
○	●						●	●	
○	●	●	▨	●	●	●	●	●	●
○	●	●	▨	●	●				
○	●		▨	●	●			●	
○	●		▨	●	●			●	
○	●			●	●	●	●	●	
○	●			●	●	●	●	●	
○	●			●	●	●	●	●	
○	●			●	●	●	●	●	
○	●	●	▨	●	●				
○	●	●	▨	●	●				
○	●	●	▨	●	●	●	●	●	●

Main Features of All Products:

- Our products are being tested by accredited lighting laboratories of Turkish universities.
- With cooled chassis, light life is increased by 30%.
- At 10, 25, 40 and 60 degrees lens options, they provide high performance up to 5 m height.
- Effective luminance
- Excellent thermal efficiency
- 5 years warranty

Common Application Areas for All Products:

- Showcases
- Jewellery shops
- Diamond stores
- Accessories shops
- Watch Stores
- Retail shops



What is Flicker in LED Lights?

LED lights oftentimes exhibit invisible flicker - rapid fluctuations in brightness that occur many times per second. Because of its rapid speed, this "flicker" in an LED lamp may not be visible, but can have physiological and neurological effects on our bodies, such as eye strain, fatigue, headaches and difficulty in concentration.

Even "invisible" flicker is sometimes noticeable. You may have observe moving objects create a distinct "trail" (stroboscopic effect) or vertical streaking lines when taking photos. Both are signs of a flickering light source.

Markaled Flicker-Free Technology..

MarkaLED uses Smart Dynamic Light Adjustment to reduce flicker for a comfortable viewing experience. Smart Dynamic Light Adjustment avoids low brightness levels that lead to high-speed LED light flashing.

“FLICKER Free”





“CHAMELEON Option”

Download on the App Store

GET IT ON Google Play

Chameleon Option?

“Chameleon” Feature is essential to adjust the color tempature for diamond, gold and silver differently by remote control easily.

(Color temperature is adjustable from 2700 K, till 6500 K)

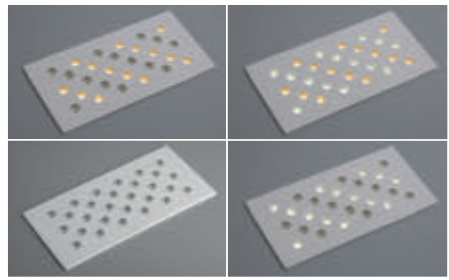

All our product range may contain the “Chameleon” feature and it is an extra option.





How Does Glossy Armatures Affect You

if your lights are glare monsters, dazzling, here is an alternative led lights with anti-glare.

How to reduce glare by choosing the right LED light armatures.

When the lens is on the surface of the light armature, light spreads all over the room and not focused on the products. thus it causes glaring.

Efficacy of the illumination goes far away from the satisfaction.

Anti-Glare LED Armatures

Led light source is behind the surface's armature to give a more efficient focus on objects. It illuminates on area without scattering by using light anti-reflective that also provides low glare in the environment of the shop.

All our products range may contain "Anti Glare" feature and it is an extra option

For more information about low glare lighting or any other lighting advice contact us with info@markaled.com





RotateLight

flush mounted direct lighting

Body:	DKP body
Dimensions:	Ø 380 x 190 mm
LED:	CREE-USA
Warranty:	5 years
Total Power of Luminaire (watt):	110,00
Luminous Flux of Luminaire/Lumen (lm):	14300,00
Color Rendering Index (CRI):	CRI > 80
Inner Cutting Size:	Ø 365 mm
Weight:	8700 gr
Box Size:	430 x 430 x 240 mm

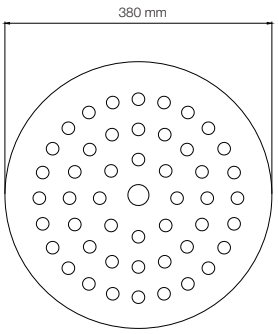

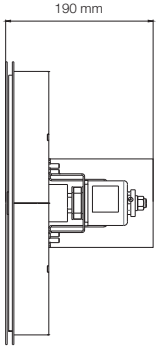

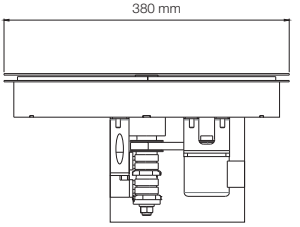

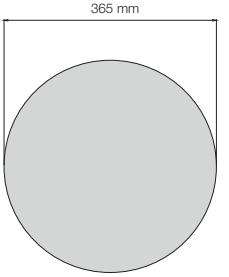

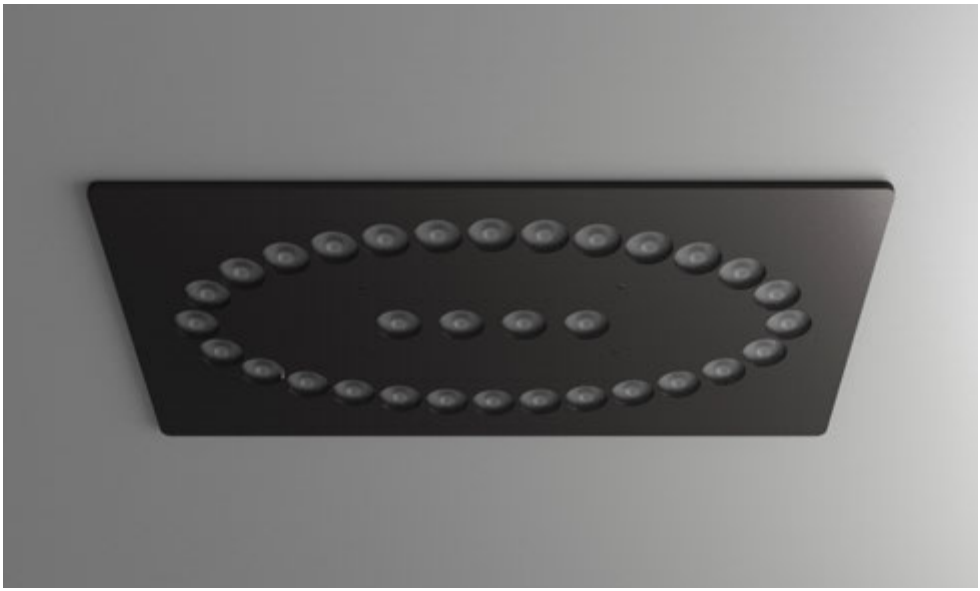

SparkLED

flush mounted direct lighting **Recta SMART**

Rotating with a well designed combination and speed, the lenses of SparkLED help gold, watches, and precious stones such as diamonds shine at their best.

Body:	DKP body
Dimensions:	350 x 190 x 52 mm
LED:	CREE-USA
Warranty:	5 years
Total Power of Luminaire (watt):	80,00
Luminous Flux of Luminaire/Lumen (lm):	13600,00
Color Rendering Index (CRI):	CRI > 80
Inner Cutting Size:	320 x 170 mm
Weight:	4000 gr
Box Size:	380 x 300 x 155 mm

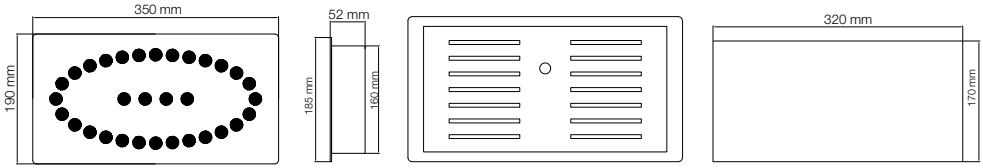

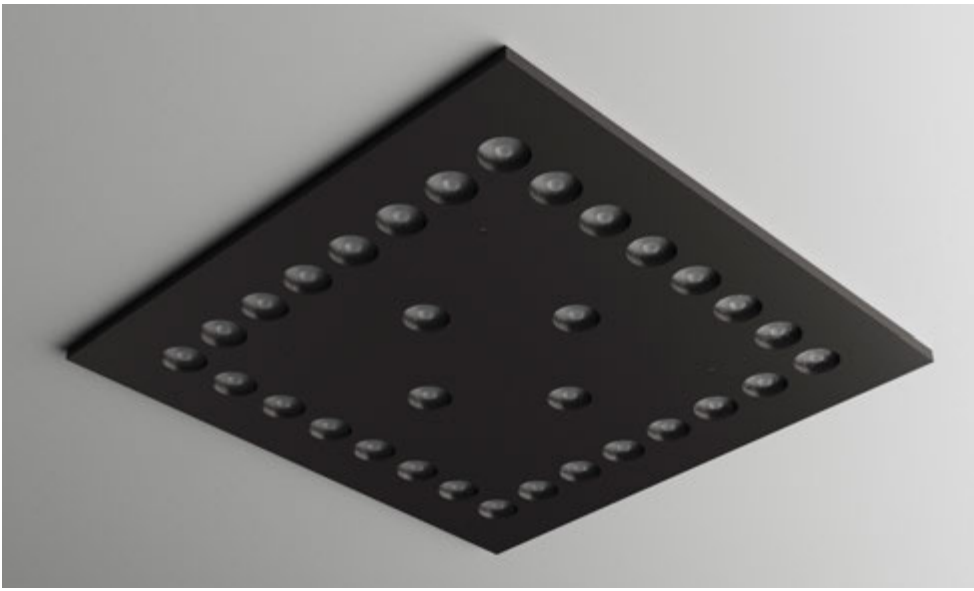

SparkLED

flush mounted direct lighting **HPS SMART**

Rotating with a well designed combination and speed, the lenses of SparkLED help gold, watches, and precious stones such as diamonds shine at their best.

Body:	DKP body
Dimensions:	240 x 240 x 52 mm
LED:	CREE-USA
Warranty:	5 years
Total Power of Luminaire (watt):	80,00
Luminous Flux of Luminaire/Lumen (lm):	13600,00
Color Rendering Index (CRI):	CRI > 80
Inner Cutting Size:	220 x 225 mm
Weight:	3200 gr
Box Size:	380 x 300 x 155 mm

5 YEARS WARRANTY · CE · ISO 9001:2008 · ISO 14001:2004 · F · IP20 · 220V 50-60Hz

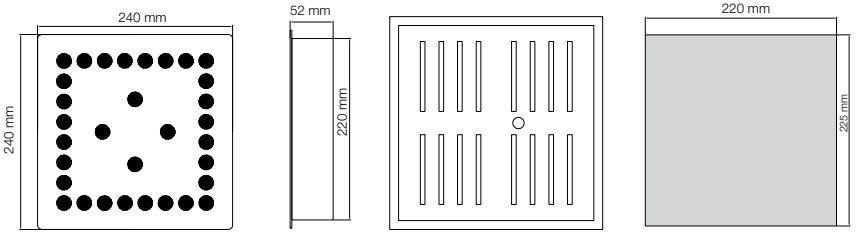



SparkLED

flush mounted direct lighting **RPS SMART**

Rotating with a well designed combination and speed, the lenses of SparkLED help gold, watches, and precious stones such as diamonds shine at their best.

Body:	DKP body
Dimensions:	Ø 230 x 52 mm
LED:	CREE-USA
Warranty:	5 years
Total Power of Luminaire (watt):	80,00
Luminous Flux of Luminaire/Lumen (lm):	13600,00
Color Rendering Index (CRI):	CRI > 80
Inner Cutting Size:	Ø 215 mm
Weight:	3200 gr
Box Size:	380 x 300 x 155 mm

5 YEARS WARRANTY · CE · ISO 9001:2008 · ISO 14001:2004 · IP20 · 220V 50-60Hz

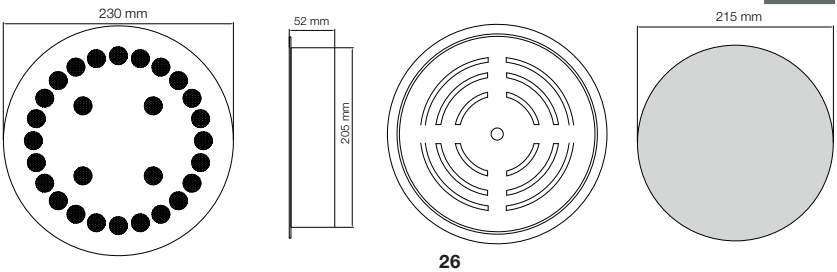

Recta Anti-Glare Series

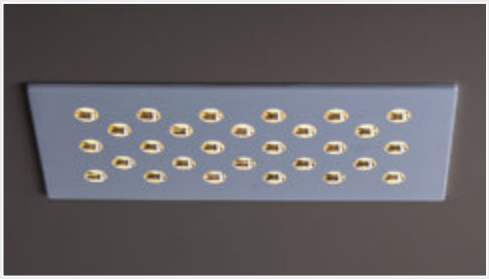

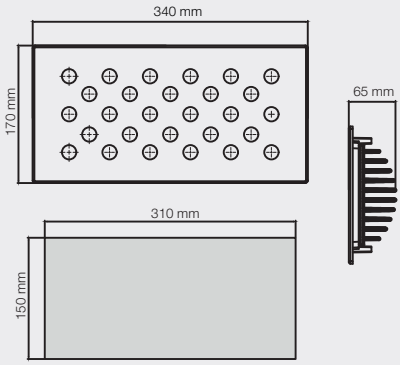

Recta28

flush mounted direct lighting

Anti-Glare

Body:	Aluminium body
Dimensions:	340 x 170 x 65 mm
LED:	CREE-USA
Warranty:	5 years
Total Power of Luminaire (watt):	48,00
Luminous Flux of Luminaire/Lumen (lm):	6250,00
Color Rendering Index (CRI):	CRI > 80
Inner Cutting Size:	310 x 150 mm
Weight:	2100 gr
Box Size:	360 x 27 x 70 mm



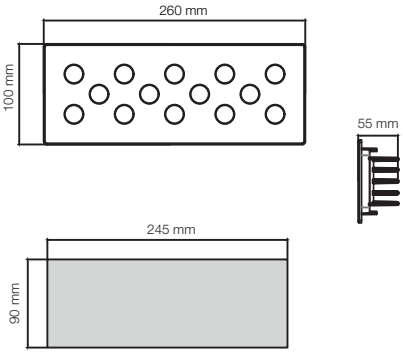

Recta14

flush mounted direct lighting

Anti-Glare

Body:	Aluminium body
Dimensions:	260 x 100 x 55 mm
LED:	CREE-USA
Warranty:	5 years
Total Power of Luminaire (watt):	24,00
Luminous Flux of Luminaire/Lumen (lm):	3200,00
Color Rendering Index (CRI):	CRI > 80
Inner Cutting Size:	245 x 90 mm
Weight:	1000 gr
Box Size:	280 x 150 x 60 mm

HPS Anti-Glare Series

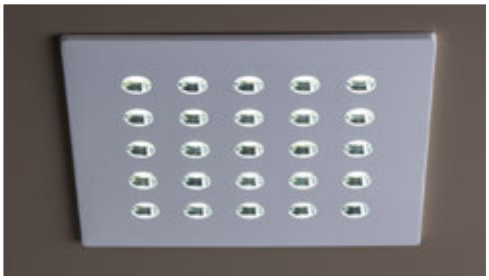

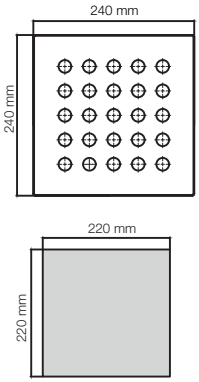

HPS25

flush mounted direct lighting

Anti-Glare

Body:	Aluminium body
Dimensions:	240 x 240 x 65 mm
LED:	CREE-USA
Warranty:	5 years
Total Power of Luminaire (watt):	43,00
Luminous Flux of Luminaire/Lumen (lm):	5750,00
Color Rendering Index (CRI):	CRI > 80
Inner Cutting Size:	220 x 220 mm
Weight:	2200 gr
Box Size:	290 x 250 x 70 mm

5 YEARS WARRANTY · CE · ISO 9001:2008 · ISO 14001:2004 · F · IP20 · 220V 50-60 Hz



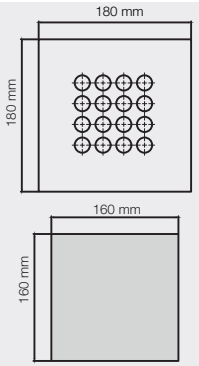

HPS16

flush mounted direct lighting

Anti-Glare

Body:	Aluminium body
Dimensions:	180 x 180 x 55 mm
LED:	CREE-USA
Warranty:	5 years
Total Power of Luminaire (watt):	30,00
Luminous Flux of Luminaire/Lumen (lm):	3780,00
Color Rendering Index (CRI):	CRI > 80
Inner Cutting Size:	160 x 160 mm
Weight:	1100 gr
Box Size:	210 x 195 x 90 mm

5 YEARS WARRANTY · CE · ISO 9001:2008 · ISO 14001:2004 · F · IP20 · 220V 50-60 Hz

HPS Anti-Glare Series



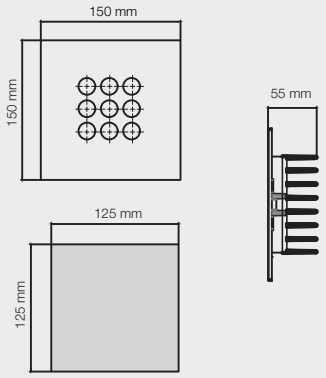

HPS9

flush mounted direct lighting

Anti-Glare

Body:	Aluminium body
Dimensions:	150 x 150 x 55 mm
LED:	CREE-USA
Warranty:	5 years
Total Power of Luminaire (watt):	16,00
Luminous Flux of Luminaire/Lumen (lm):	2100,00
Color Rendering Index (CRI):	CRI > 80
Inner Cutting Size:	125 x 125 mm
Weight:	900 gr
Box Size:	210 x 195 x 90 mm



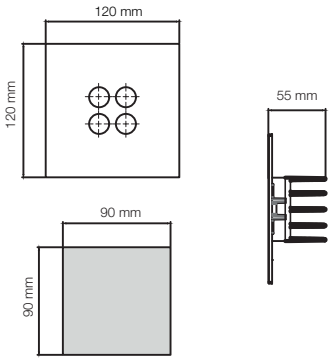

HPS4

flush mounted direct lighting

Anti-Glare

Body:	Aluminium body
Dimensions:	120 x 120 x 55 mm
LED:	CREE-USA
Warranty:	5 years
Total Power of Luminaire (watt):	5,00
Luminous Flux of Luminaire/Lumen (lm):	650,00
Color Rendering Index (CRI):	CRI > 80
Inner Cutting Size:	90 x 90 mm
Weight:	200 gr
Box Size:	160 x 110 x 50 mm

RPS Anti-Glare Series



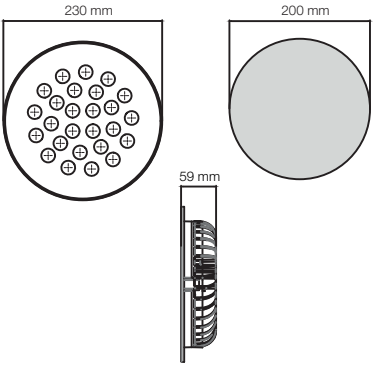

RPS26

flush mounted direct lighting **Anti-Glare**

Body:	Aluminium body
Dimensions:	Ø 230 mm x 59 mm
LED:	CREE-USA
Warranty:	5 years
Total Power of Luminaire (watt):	45,00
Luminous Flux of Luminaire/Lumen (lm):	5900,00
Color Rendering Index (CRI):	CRI > 80
Inner Cutting Size:	Ø 200 mm
Weight:	1700 gr
Box Size:	230 x 230 x 80 mm

5 YEARS WARRANTY · CE · ISO 9001:2008 · ISO 14001:2004 · F · IP20 · 220V 50-60 Hz



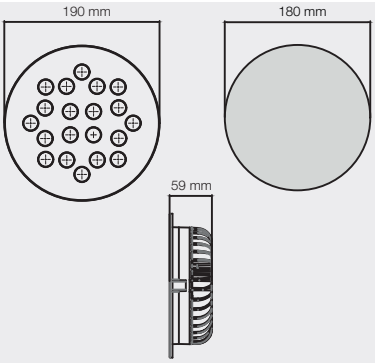

RPS20

flush mounted direct lighting **Anti-Glare**

Body:	Aluminium body
Dimensions:	Ø 190 mm x 59 mm
LED:	CREE-USA
Warranty:	5 years
Total Power of Luminaire (watt):	34,00
Luminous Flux of Luminaire/Lumen (lm):	4400,00
Color Rendering Index (CRI):	CRI > 80
Inner Cutting Size:	Ø 180 mm
Weight:	1400 gr
Box Size:	220 x 200 x 60 mm

5 YEARS WARRANTY · CE · ISO 9001:2008 · ISO 14001:2004 · F · IP20 · 220V 50-60 Hz

RPS Anti-Glare Series



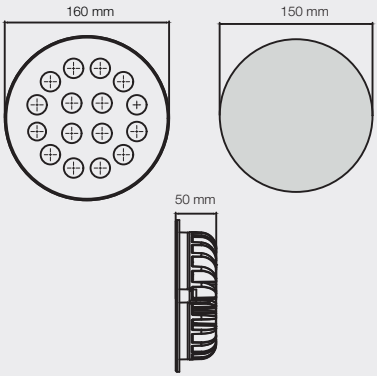

RPS16

flush mounted direct lighting **Anti-Glare**

Body:	Aluminium body
Dimensions:	Ø 160 mm x 50 mm
LED:	CREE-USA
Warranty:	5 years
Total Power of Luminaire (watt):	30,00
Luminous Flux of Luminaire/Lumen (lm):	3780,00
Color Rendering Index (CRI):	CRI > 80
Inner Cutting Size:	Ø 150 mm
Weight:	900 gr
Box Size:	180 x 170 x 60 mm

5 YEARS WARRANTY · CE · ISO 9001:2008 · ISO 14001:2004 · F · IP20 · 220V 50-60 Hz



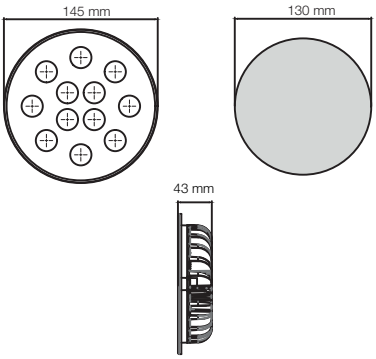

RPS12

flush mounted direct lighting **Anti-Glare**

Body:	Aluminium body
Dimensions:	Ø 145 mm x 43 mm
LED:	CREE-USA
Warranty:	5 years
Total Power of Luminaire (watt):	22,00
Luminous Flux of Luminaire/Lumen (lm):	2860,00
Color Rendering Index (CRI):	CRI > 80
Inner Cutting Size:	Ø 130 mm
Weight:	700 gr
Box Size:	180 x 155 x 55 mm

5 YEARS WARRANTY · CE · ISO 9001:2008 · ISO 14001:2004 · F · IP20 · 220V 50-60 Hz

RPS Anti-Glare Series



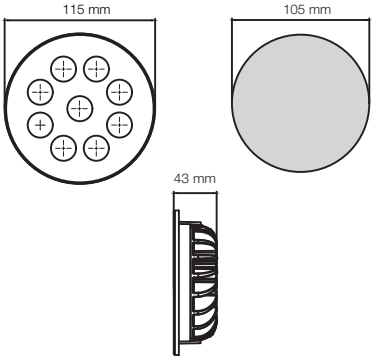

RPS9

flush mounted direct lighting

Anti-Glare

Body:	Aluminium body
Dimensions:	Ø 115 mm x 43 mm
LED:	CREE-USA
Warranty:	5 years
Total Power of Luminaire (watt):	16,00
Luminous Flux of Luminaire/Lumen (lm):	2080,00
Color Rendering Index (CRI):	CRI > 80
Inner Cutting Size:	Ø 105 mm
Weight:	500 gr
Box Size:	160 x 145 x 50 mm



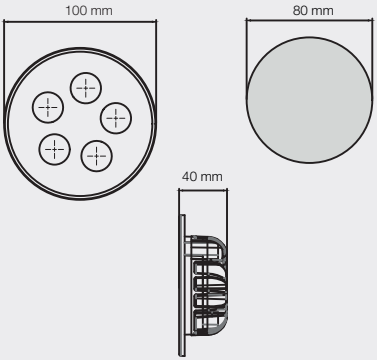

RPS5

flush mounted direct lighting

Anti-Glare

Body:	Aluminium body
Dimensions:	Ø 100 mm x 40 mm
LED:	CREE-USA
Warranty:	5 years
Total Power of Luminaire (watt):	9,00
Luminous Flux of Luminaire/Lumen (lm):	1150,00
Color Rendering Index (CRI):	CRI > 80
Inner Cutting Size:	Ø 80 mm
Weight:	400 gr
Box Size:	160 x 110 x 50 mm

RPS Anti-Glare Series



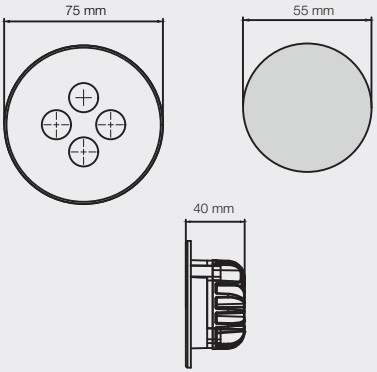

RPS4

flush mounted direct lighting **Anti-Glare**

Body:	Aluminium body
Dimensions:	Ø 75 mm x 40 mm
LED:	CREE-USA
Warranty:	5 years
Total Power of Luminaire (watt):	5,00
Luminous Flux of Luminaire/Lumen (lm):	650,00
Color Rendering Index (CRI):	CRI > 80
Inner Cutting Size:	Ø 55 mm
Weight:	200 gr
Box Size:	110 x 105 x 50 mm

5 YEARS WARRANTY · CE · ISO 9001:2008 · ISO 14001:2004 · F · IP20 · 220V 50-60 Hz

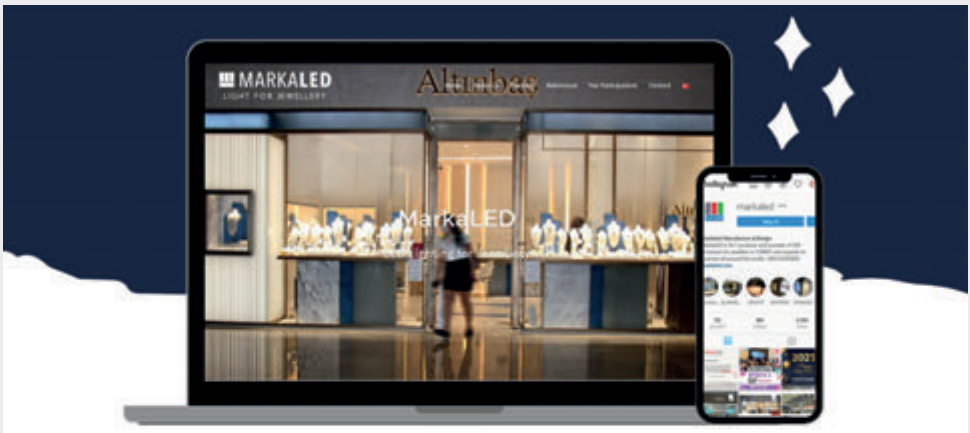

Follow Us on Social Media

@ledmarkaled @markaled @Markaled_A

MARKALED.COM



Recta28

flush mounted direct lighting

Body:	Aluminium body
Dimensions:	340 x 170 x 57 mm
LED:	CREE-USA
Warranty:	5 years
Total Power of Luminaire (watt):	48,00
Luminous Flux of Luminaire/Lumen (lm):	6250,00
Color Rendering Index (CRI):	CRI > 80
Inner Cutting Size:	310 mm x 150 mm
Weight:	2000 gr
Box Size:	360 x 270 x 70 mm

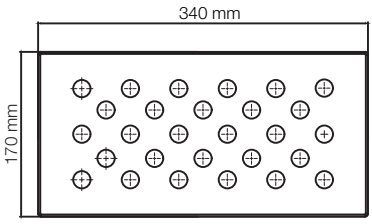

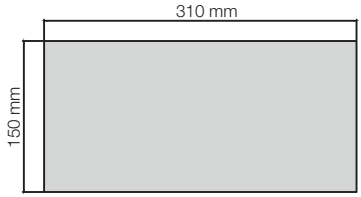



Recta Series



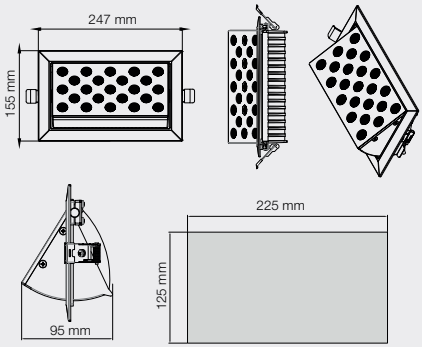

Recta23

flush mounted direct lighting

Body:	Aluminium body
Dimensions:	247 x 155 x 95 mm
LED:	CREE-USA
Warranty:	5 years
Total Power of Luminaire (watt):	40,00
Luminous Flux of Luminaire/Lumen (lm):	4200,00
Color Rendering Index (CRI):	CRI > 80
Inner Cutting Size:	225 x 125 mm
Weight:	2200 gr
Box Size:	290 x 160 x 100 mm

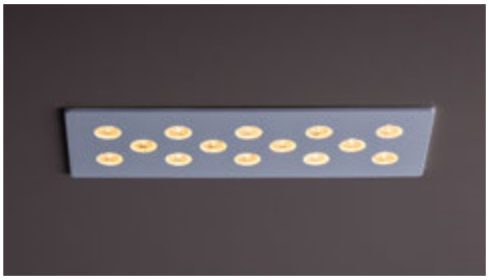

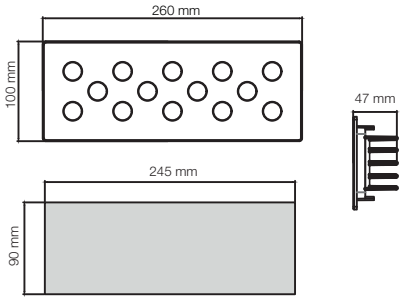

Recta14

flush mounted direct lighting

Body:	Aluminium body
Dimensions:	260 x 100 x 47 mm
LED:	CREE-USA
Warranty:	5 years
Total Power of Luminaire (watt):	24,00
Luminous Flux of Luminaire/Lumen (lm):	3200,00
Color Rendering Index (CRI):	CRI > 80
Inner Cutting Size:	245 x 90 mm
Weight:	1000 gr
Box Size:	280 x 150 x 60 mm



SparkLED

flush mounted direct lighting **RPS**

Rotating with a well designed combination and speed, the lenses of SparkLED help gold, watches, and precious stones such as diamonds shine at their best.

Body:	DKP body
Dimensions:	Ø 230 mm x 52 mm
LED:	CREE-USA
Warranty:	5 years
Total Power of Luminaire (watt):	30,00
Luminous Flux of Luminaire/Lumen (lm):	3900,00
Color Rendering Index (CRI):	CRI > 80
Inner Cutting Size:	Ø 215 mm
Weight:	2200 gr
Box Size:	320 x 300 x 155 mm

5 YEARS WARRANTY · CE · ISO 9001:2008 · ISO 14001:2004 · F · IP20 · 220V 50-60Hz

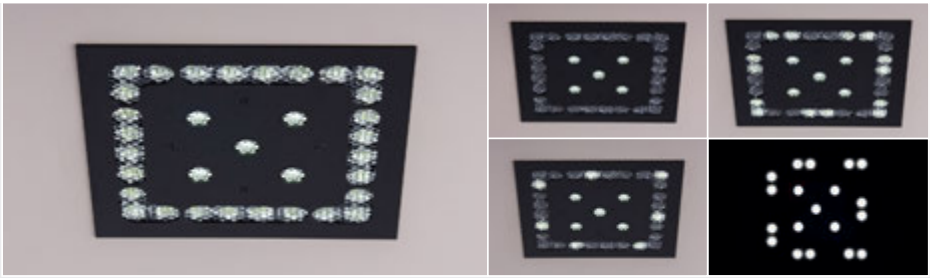

SparkLED

flush mounted direct lighting **HPS**

Rotating with a well designed combination and speed, the lenses of SparkLED help gold, watches, and precious stones such as diamonds shine at their best.

Body:	DKP body
Dimensions:	240 x 240 x 52 mm
LED:	CREE-USA
Warranty:	5 years
Total Power of Luminaire (watt):	34,00
Luminous Flux of Luminaire/Lumen (lm):	4400,00
Color Rendering Index (CRI):	CRI > 80
Inner Cutting Size:	220 x 225 mm
Weight:	2200 gr
Box Size:	320 x 300 x 155 mm

5 YEARS WARRANTY · CE · ISO 9001:2008 · ISO 14001:2004 · F · IP20 · 220V 50-60Hz

Spark Series

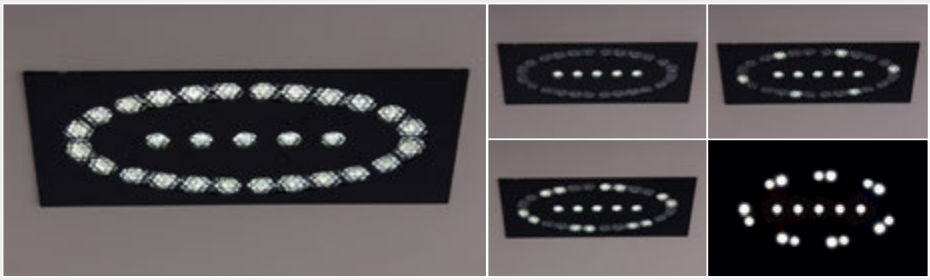

SparkLED

flush mounted direct lighting **Recta**

Rotating with a well designed combination and speed, the lenses of SparkLED help gold, watches, and precious stones such as diamonds shine at their best.

Body:	DKP body
Dimensions:	340 x 170 x 52 mm
LED:	CREE-USA
Warranty:	5 years
Total Power of Luminaire (watt):	34,00
Luminous Flux of Luminaire/Lumen (lm):	4400,00
Color Rendering Index (CRI):	CRI > 80
Inner Cutting Size:	310 x 160 mm
Weight:	2300 gr
Box Size:	360 x 210 x 70 mm

5 YEARS WARRANTY · CE · ISO 9001:2008 · ISO 14001:2004 · F · IP20 · 220V 50-60 Hz



Weight:

SparkLED

flush mounted direct lighting **RPS16**

Rotating with a well designed combination and speed, the lenses of SparkLED help gold, watches, and precious stones such as diamonds shine at their best.

Body:	DKP body
Dimensions:	Ø 160 mm x 50 mm
LED:	CREE-USA
Warranty:	5 years
Total Power of Luminaire (watt):	20,00
Luminous Flux of Luminaire/Lumen (lm):	2600,00
Color Rendering Index (CRI):	CRI > 80
Inner Cutting Size:	Ø 150 mm
Weight:	1300 gr
Box Size:	210 x 195 x 90 mm

5 YEARS WARRANTY · CE · ISO 9001:2008 · ISO 14001:2004 · F · IP20 · 220V 50-60 Hz

Natt Series



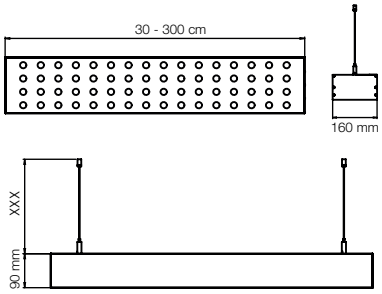

Natt HP4

surface mounted or pendant direct lighting

Body:	Aluminium body
Dimensions:	W : 160 mm x H: 90 mm Length : 30 - 300 cm
LED:	CREE-USA
Warranty:	5 years
Total Power of Luminaire per meter (watt/m):	140,00
Luminous Flux of Luminaire per meter (lm/m):	18240,00
Color Rendering Index (CRI):	CRI > 80
Weight per meter:	8000 gr

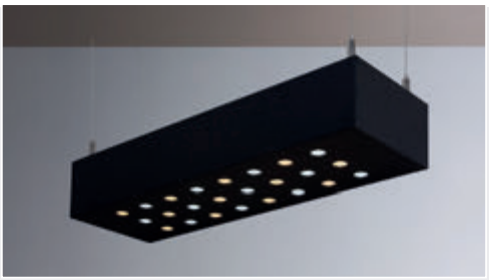

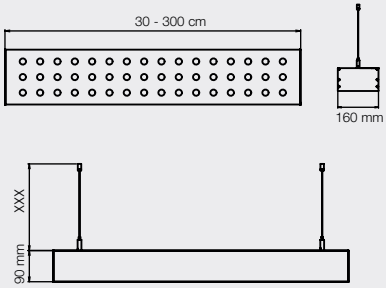

Natt HP3

surface mounted or pendant direct lighting

Body:	Aluminium body
Dimensions:	W : 160 mm x H: 90 mm Length : 30 - 300 cm
LED:	CREE-USA
Warranty:	5 years
Total Power of Luminaire per meter (watt/m):	105,00
Luminous Flux of Luminaire per meter (lm/m):	13680,00
Color Rendering Index (CRI):	CRI > 80
Weight per meter:	7500 gr

Natt Series



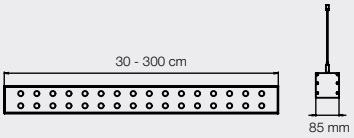

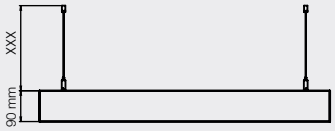

Natt HP2

surface mounted or pendant direct lighting

Body:	Aluminium body
Dimensions:	W : 85 mm x H: 90 mm Length : 30 - 300 cm
LED:	CREE-USA
Warranty:	5 years
Total Power of Luminaire per meter (watt/m):	70,00
Luminous Flux of Luminaire per meter (lm/m):	9120,00
Color Rendering Index (CRI):	CRI > 80
Weight per meter:	5100 gr



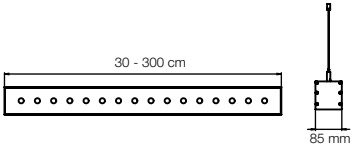

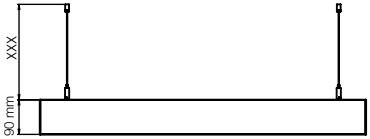

Natt HP

surface mounted or pendant direct lighting

Body:	Aluminium body
Dimensions:	W : 85 mm x H: 90 mm Length : 30 - 300 cm
LED:	CREE-USA
Warranty:	5 years
Total Power of Luminaire per meter (watt/m):	35,00
Luminous Flux of Luminaire per meter (lm/m):	4560,00
Color Rendering Index (CRI):	CRI > 80
Weight per meter:	5100 gr

Kiklop Series



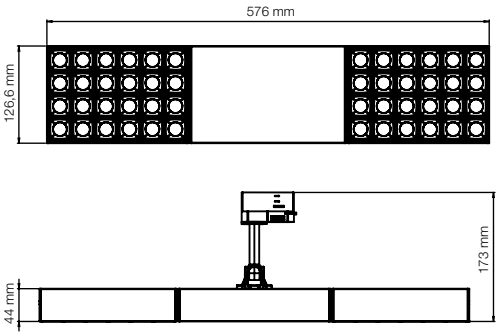

Kiklop48

mounted direct lighting

Tracklight Anti-Glare

Body:	Aluminium body
Dimensions:	576 x 127 mm
LED:	CREE-USA
Warranty:	5 years
Total Power of Luminaire (watt):	76,00
Luminous Flux of Luminaire/Lumen (lm):	8480,00
Color Rendering Index (CRI):	CRI > 80
Weight:	2500 gr
Box Size:	190 x 600 x 400 mm

5 YEARS WARRANTY · CE · ISO 9001:2008 · ISO 14001:2004 · F · IP20 · 220V 50-60 Hz



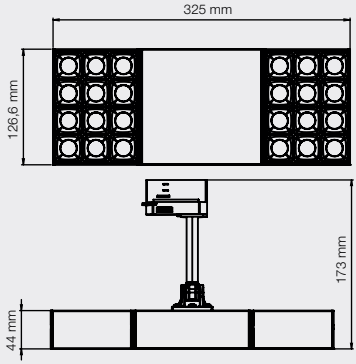

Kiklop24

mounted direct lighting

Tracklight Anti-Glare

Body:	Aluminium body
Dimensions:	325 x 127 mm
LED:	CREE-USA
Warranty:	5 years
Total Power of Luminaire (watt):	38,00
Luminous Flux of Luminaire/Lumen (lm):	4240,00
Color Rendering Index (CRI):	CRI > 80
Weight:	1600 gr
Box Size:	190 x 600 x 400 mm

5 YEARS WARRANTY · CE · ISO 9001:2008 · ISO 14001:2004 · F · IP20 · 220V 50-60 Hz

Ruut Series



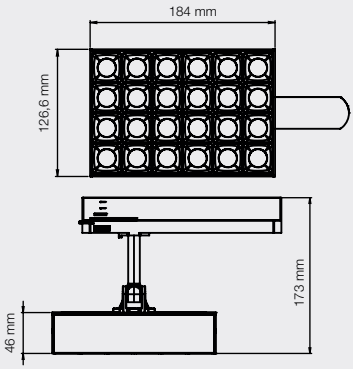

Ruut24

mounted direct lighting

Tracklight Anti-Glare

Body:	Aluminium body
Dimensions:	184 x 127 mm
LED:	CREE-USA
Warranty:	5 years
Total Power of Luminaire (watt):	38,00
Luminous Flux of Luminaire/Lumen (lm):	4240,00
Color Rendering Index (CRI):	CRI > 80
Weight:	2200 gr
Box Size:	260 x 260 x 110 mm



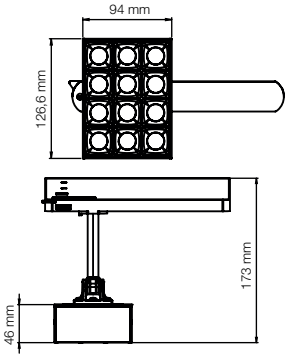

Ruut12

mounted direct lighting

Tracklight Anti-Glare

Body:	Aluminium body
Dimensions:	94 x 127 mm
LED:	CREE-USA
Warranty:	5 years
Total Power of Luminaire (watt):	19,00
Luminous Flux of Luminaire/Lumen (lm):	2120,00
Color Rendering Index (CRI):	CRI > 80
Weight:	1500 gr
Box Size:	210 x 210 x 100 mm

Lagra Series



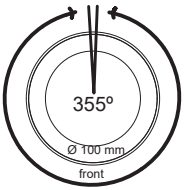

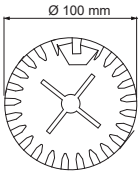

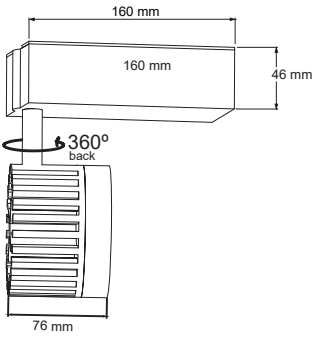

Lagramet

mounted direct lighting **Tracklight**

Body:	Aluminium body
Dimensions:	Ø 100 mm x 76 mm
LED:	CREE-USA
Warranty:	5 years
Total Power of Luminaire (watt):	28,00
Luminous Flux of Luminaire/Lumen (lm):	3640,00
Color Rendering Index (CRI):	CRI > 80
Weight:	1100 gr
Box Size:	210 x 260 x 105 mm





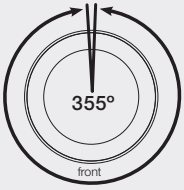

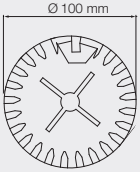

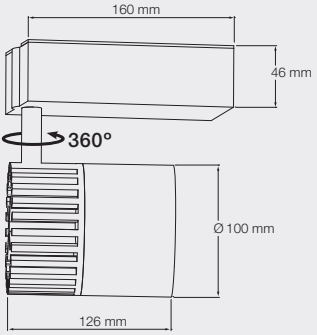

Lagra

mounted direct lighting **Tracklight**

Body:	Aluminium body
Dimensions:	Ø 100 mm x 126 mm
LED:	CREE-USA
Warranty:	5 years
Total Power of Luminaire (watt):	30,00
Luminous Flux of Luminaire/Lumen (lm):	3900
Color Rendering Index (CRI):	CRI > 80
Weight:	1300 gr
Box Size:	210 x 260 x 105 mm



MalmS / Castor



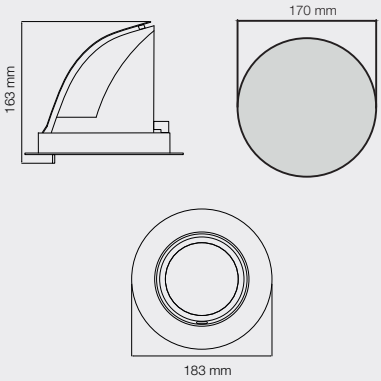

MalmS

flush mounted direct lighting

Body:	Aluminium body
Dimensions:	Ø 183 mm x 163 mm
LED:	CREE-USA
Warranty:	5 years
Total Power of Luminaire (watt):	28,00
Luminous Flux of Luminaire/Lumen (lm):	3640,00
Color Rendering Index (CRI):	CRI > 80
Inner Cutting Size:	Ø 170 mm
Weight:	1450 gr
Box Size:	220 x 220 x 180 mm

5 YEARS WARRANTY · CE · ISO 9001:2008 · ISO 14001:2004 · F · IP20 · 220V 50-60 Hz



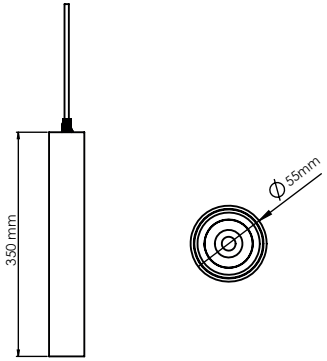

Castor

pendant direct lighting

Body:	Electrostatic powder coating Aluminum injection
Dimensions:	Ø 55 mm x 350 mm
LED:	CREE-USA
Warranty:	5 years
Total Power of Luminaire (watt):	14,00
Luminous Flux of Luminaire/Lumen (lm):	1820,00
Color Rendering Index (CRI):	CRI > 80
Weight:	1560 gr
Box Size:	190 x 600 x 400 mm

5 YEARS WARRANTY · CE · ISO 9001:2008 · ISO 14001:2004 · F · IP20 · 220V 50-60 Hz

Lina Series



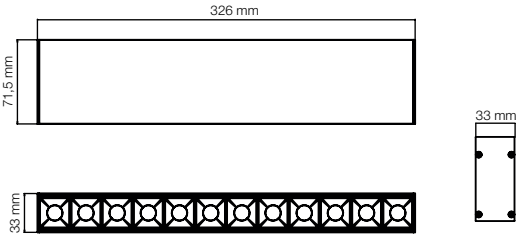

Lina12 WM

mounted direct lighting

Anti-Glare

Body:	Aluminium body
Dimensions:	326 x 33 x 71 mm
LED:	CREE-USA
Warranty:	5 years
Total Power of Luminaire (watt):	19,00
Luminous Flux of Luminaire/Lumen (lm):	2470,00
Color Rendering Index (CRI):	CRI > 80
Weight:	1300 gr
Box Size:	350 x 240 x 150 mm

5 YEARS WARRANTY · CE · ISO 9001:2008 · ISO 14001:2004 · F · IP20 · 220V 50-60 Hz



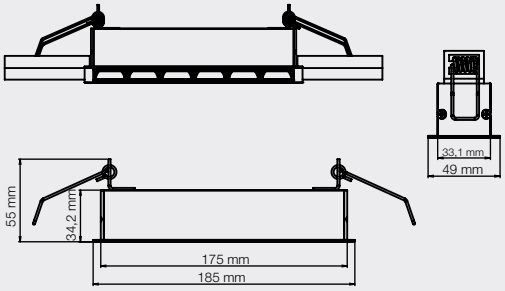

Lina6 RC

flush mounted direct lighting

Anti-Glare

Body:	Aluminium body
Dimensions:	175 x 49 x 55 mm
LED:	CREE-USA
Warranty:	5 years
Total Power of Luminaire (watt):	13,00
Luminous Flux of Luminaire/Lumen (lm):	1240,00
Color Rendering Index (CRI):	CRI > 80
Inner Cutting Size:	168 x 35 mm
Weight:	450 gr
Box Size:	210 x 210 x 100 mm

5 YEARS WARRANTY · CE · ISO 9001:2008 · ISO 14001:2004 · F · IP20 · 220V 50-60 Hz

Lina Series



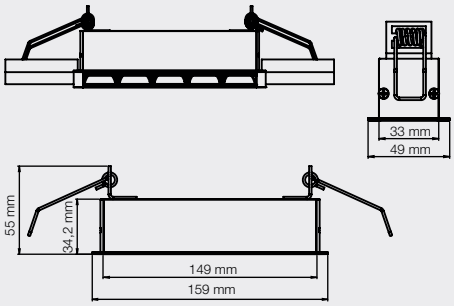

Lina5 RC

flush mounted direct lighting

Anti-Glare

Body:	Aluminium body
Dimensions:	149 x 49 x 55 mm
LED:	CREE-USA
Warranty:	5 years
Total Power of Luminaire (watt):	12,00
Luminous Flux of Luminaire/Lumen (lm):	1020,00
Color Rendering Index (CRI):	CRI > 80
Inner Cutting Size:	141 x 35 mm
Weight:	450 gr
Box Size:	210 x 210 x 100 mm



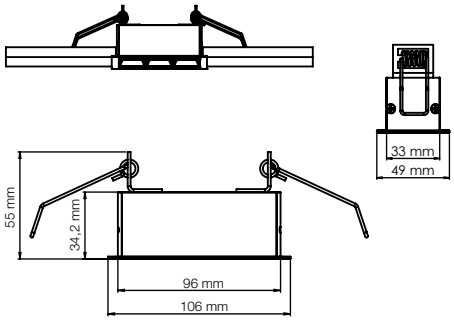

Lina3 RC

flush mounted direct lighting

Anti-Glare

Body:	Aluminium body
Dimensions:	96 x 49 x 55 mm
LED:	CREE-USA
Warranty:	5 years
Total Power of Luminaire (watt):	7,00
Luminous Flux of Luminaire/Lumen (lm):	660,00
Color Rendering Index (CRI):	CRI > 80
Inner Cutting Size:	89 x 35 mm
Weight:	360 gr
Box Size:	260 x 210 x 100 mm

HPS Series



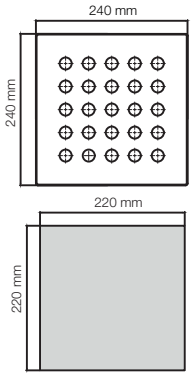

HPS25

flush mounted direct lighting

Body:	Aluminium body
Dimensions:	240 x 240 x 57 mm
LED:	CREE-USA
Warranty:	5 years
Total Power of Luminaire (watt):	43,00
Luminous Flux of Luminaire/Lumen (lm):	5750,00
Color Rendering Index (CRI):	CRI > 80
Inner Cutting Size:	220 x 220 mm
Weight:	2100 gr
Box Size:	290 x 250 x 70 mm



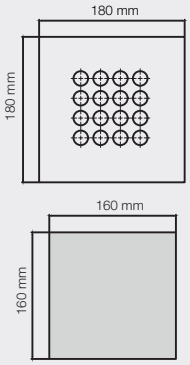

HPS16

flush mounted direct lighting

Body:	Aluminium body
Dimensions:	180 x 180 x 47 mm
LED:	CREE-USA
Warranty:	5 years
Total Power of Luminaire (watt):	30,00
Luminous Flux of Luminaire/Lumen (lm):	3780,00
Color Rendering Index (CRI):	CRI > 80
Inner Cutting Size:	160 x 160 mm
Weight:	1100 gr
Box Size:	210 x 195 x 90 mm

HPS Series



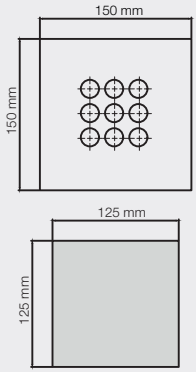

HPS9

flush mounted direct lighting

Body:	Aluminium body
Dimensions:	150 x 150 x 47 mm
LED:	CREE-USA
Warranty:	5 years
Total Power of Luminaire (watt):	16,00
Luminous Flux of Luminaire/Lumen (lm):	2100,00
Color Rendering Index (CRI):	CRI > 80
Inner Cutting Size:	125 x 125 mm
Weight:	900 gr
Box Size:	210 x 195 x 90 mm



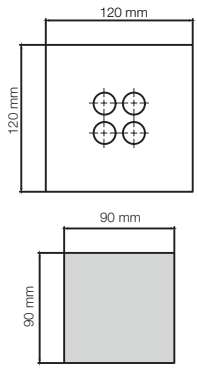

HPS4

flush mounted direct lighting

Body:	Aluminium body
Dimensions:	120 x 120 x 47 mm
LED:	CREE-USA
Warranty:	5 years
Total Power of Luminaire (watt):	5,00
Luminous Flux of Luminaire/Lumen (lm):	650,00
Color Rendering Index (CRI):	CRI > 80
Inner Cutting Size:	90 x 90 mm
Weight:	200 gr
Box Size:	160 x 110 x 50 mm

RPS Series

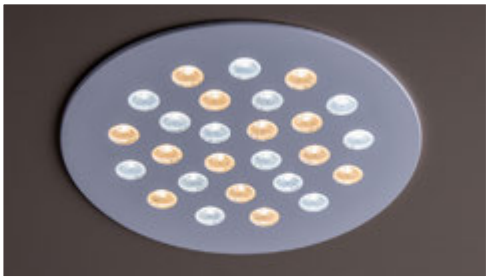

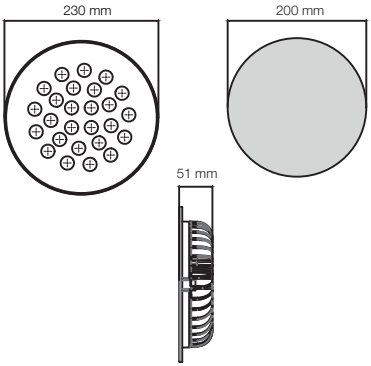

RPS26

flush mounted direct lighting

Body:	Aluminium body
Dimensions:	Ø 230 mm x 51 mm
LED:	CREE-USA
Warranty:	5 years
Total Power of Luminaire (watt):	45,00
Luminous Flux of Luminaire/Lumen (lm):	5900,00
Color Rendering Index (CRI):	CRI > 80
Inner Cutting Size:	Ø 200 mm
Weight:	1600 gr
Box Size:	230 x 230 x 80 mm

5 YEARS WARRANTY · CE · ISO 9001:2008 · ISO 14001:2004 · F · IP20 · 220V 50-60 Hz



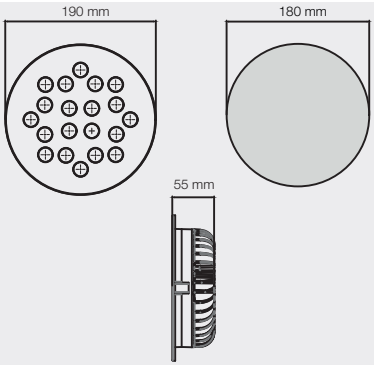

RPS20

flush mounted direct lighting

Body:	Aluminium body
Dimensions:	Ø 190 mm x 55 mm
LED:	CREE-USA
Warranty:	5 years
Total Power of Luminaire (watt):	34,00
Luminous Flux of Luminaire/Lumen (lm):	4400,00
Color Rendering Index (CRI):	CRI > 80
Inner Cutting Size:	Ø 180 mm
Weight:	1300 gr
Box Size:	220 x 200 x 60 mm

5 YEARS WARRANTY · CE · ISO 9001:2008 · ISO 14001:2004 · F · IP20 · 220V 50-60 Hz

RPS Series



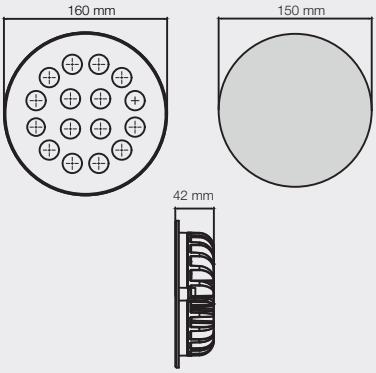

RPS16

flush mounted direct lighting

Body:	Aluminium body
Dimensions:	Ø 160 mm x 42 mm
LED:	CREE-USA
Warranty:	5 years
Total Power of Luminaire (watt):	30,00
Luminous Flux of Luminaire/Lumen (lm):	3780,00
Color Rendering Index (CRI):	CRI > 80
Inner Cutting Size:	Ø 150 mm
Weight:	900 gr
Box Size:	180 x 170 x 60 mm

5 YEARS WARRANTY · CE · ISO 9001:2008 · ISO 14001:2004 · F · IP20 · 220V 50-60 Hz



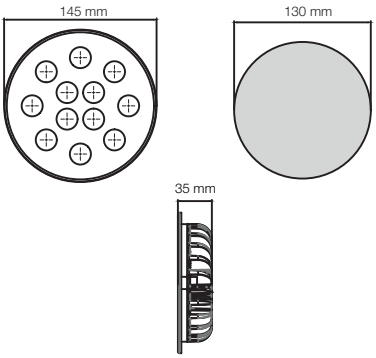

RPS12

flush mounted direct lighting

Body:	Aluminium body
Dimensions:	Ø 145 mm x 35 mm
LED:	CREE-USA
Warranty:	5 years
Total Power of Luminaire (watt):	22,00
Luminous Flux of Luminaire/Lumen (lm):	2860,00
Color Rendering Index (CRI):	CRI > 80
Inner Cutting Size:	Ø 130 mm
Weight:	700 gr
Box Size:	180 x 155 x 55 mm

5 YEARS WARRANTY · CE · ISO 9001:2008 · ISO 14001:2004 · F · IP20 · 220V 50-60 Hz

RPS Series



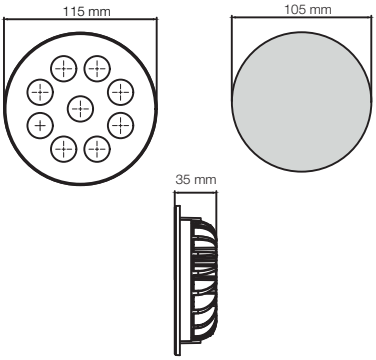

RPS9

flush mounted direct lighting

Body:	Aluminium body
Dimensions:	Ø 115 mm x 35 mm
LED:	CREE-USA
Warranty:	5 years
Total Power of Luminaire (watt):	16,00
Luminous Flux of Luminaire/Lumen (lm):	2080,00
Color Rendering Index (CRI):	CRI > 80
Inner Cutting Size:	Ø 105 mm
Weight:	500 gr
Box Size:	160 x 145 x 50 mm

5 YEARS WARRANTY · CE · ISO 9001:2008 · ISO 14001:2004 · F · IP20 · 220V 50-60 Hz



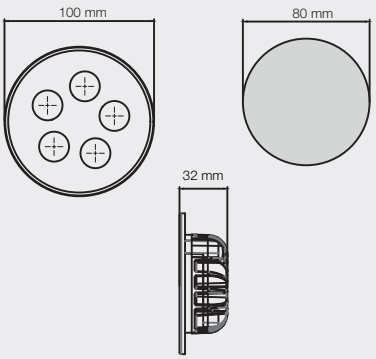

RPS5

flush mounted direct lighting

Body:	Aluminium body
Dimensions:	Ø 100 mm x 32 mm
LED:	CREE-USA
Warranty:	5 years
Total Power of Luminaire (watt):	9,00
Luminous Flux of Luminaire/Lumen (lm):	1150,00
Color Rendering Index (CRI):	CRI > 80
Inner Cutting Size:	Ø 80 mm
Weight:	400 gr
Box Size:	160 x 110 x 50 gr

5 YEARS WARRANTY · CE · ISO 9001:2008 · ISO 14001:2004 · F · IP20 · 220V 50-60 Hz

RPS Series



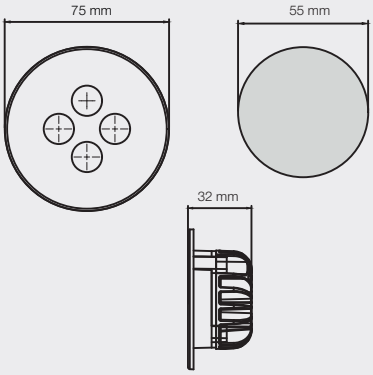

RPS4

flush mounted direct lighting

Body:	Aluminium body
Dimensions:	Ø 75 mm x 32 mm
LED:	CREE-USA
Warranty:	5 years
Total Power of Luminaire (watt):	5,00
Luminous Flux of Luminaire/Lumen (lm):	650,00
Color Rendering Index (CRI):	CRI > 80
Inner Cutting Size:	Ø 55 mm
Weight:	200 gr
Box Size:	110 x 105 x 55 gr



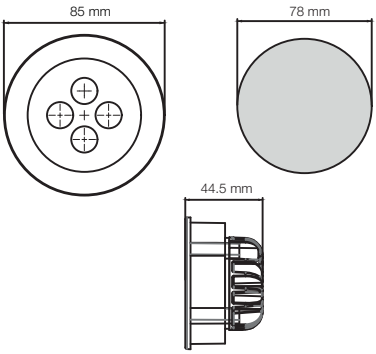

RPS4D

flush mounted direct lighting

Body:	Aluminium body
Dimensions:	Ø 85 mm x 44.5 mm
LED:	CREE-USA
Warranty:	5 years
Total Power of Luminaire (watt):	5,00
Luminous Flux of Luminaire/Lumen (lm):	650,00
Color Rendering Index (CRI):	CRI > 80
Inner Cutting Size:	Ø 78 mm
Weight:	200 gr
Box Size:	110 x 105 x 50 mm

Inox Series



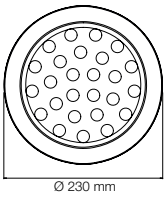

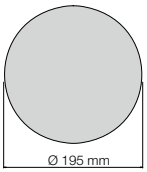

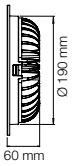

Inox26R

flush mounted direct lighting

Body:	Aluminium body
Dimensions:	Ø 230 mm x 60 mm
LED:	CREE-USA
Warranty:	5 years
Total Power of Luminaire (watt):	45,00
Luminous Flux of Luminaire/Lumen (lm):	5900,00
Color Rendering Index (CRI):	CRI > 80
Inner Cutting Size:	Ø 195 mm
Weight:	1800 gr
Box Size:	230 x 230 x 80 mm

5 YEARS WARRANTY · CE · ISO 9001:2008 · ISO 14001:2004 · F · IP20 · 220V 50-60 Hz



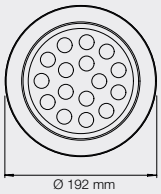

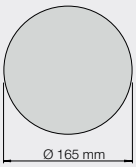

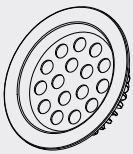



Inox16R

flush mounted direct lighting

Body:	Aluminium body
Dimensions:	Ø 192 mm x 54 mm
LED:	CREE-USA
Warranty:	5 years
Total Power of Luminaire (watt):	30,00
Luminous Flux of Luminaire/Lumen (lm):	3780,00
Color Rendering Index (CRI):	CRI > 80
Inner Cutting Size:	Ø 165 mm
Weight:	1100 gr
Box Size:	210 x 195 x 90 mm

5 YEARS WARRANTY · CE · ISO 9001:2008 · ISO 14001:2004 · F · IP20 · 220V 50-60 Hz

In Case Lighting



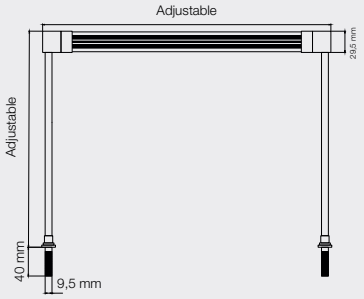

GoalPost

standing and portable direct lighting

This armature is designed to be installed inside displays, especially counters, niches, racks, and glass closets. It is a great alternative for interiors with no or non-standard ceilings.

Body:	Aluminium body
Dimensions:	Ø 30 mm x any length desired
LED:	CREE-USA
Warranty:	5 years
Total Power of Luminaire per meter (watt/m):	35,00
Luminous Flux of Luminaire per meter (lm/m):	4900,00
Color Rendering Index (CRI):	CRI > 80
Weight per meter:	600 gr



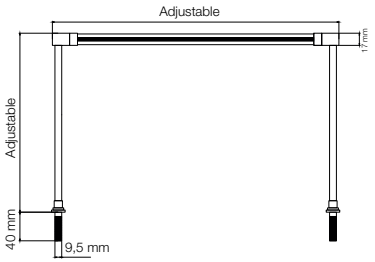

GoalPost Slim

standing and portable direct lighting

This armature is designed to be installed inside displays, especially counters, niches, racks, and glass closets. It is a great alternative for interiors with no or non-standard ceilings.

Body:	Aluminium body
Dimensions:	Ø 16 mm x any length desired
LED:	CREE-USA
Warranty:	5 years
Total Power of Luminaire per meter (watt/m):	22,00
Luminous Flux of Luminaire per meter (lm/m):	2700,00
Color Rendering Index (CRI):	CRI > 80
Weight per meter:	500 gr





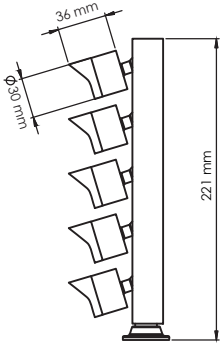

Hatlight5

standing and portable direct lighting

Option: Hatlight3

Body:	Aluminium body
Dimensions:	Ø 30 mm x 221 mm
LED:	CREE-USA
Warranty:	5 years
Total Power of Luminaire (watt):	15,00
Luminous Flux of Luminaire/Lumen (lm):	1950,00
Color Rendering Index (CRI):	CRI > 80
Weight:	1400 gr
Box Size:	400 x 90 x 70 mm



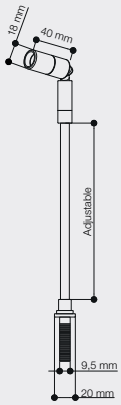

Hanlight

standing and portable direct lighting

Body:	Aluminium body
Dimensions:	Ø 18 mm x 40 mm
LED:	CREE-USA
Warranty:	5 years
Total Power of Luminaire (watt):	1,00
Luminous Flux of Luminaire/Lumen (lm):	130,00
Color Rendering Index (CRI):	CRI > 90
Weight:	300 gr



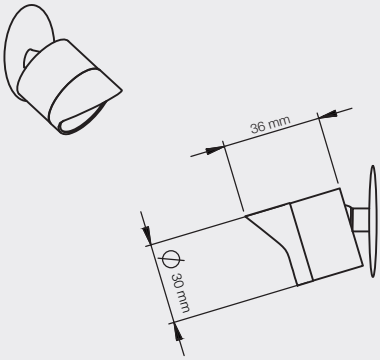

Hatlight

standing and portable direct lighting

Body:	Aluminium body
Dimensions:	Ø 30 mm x 36 mm
LED:	CREE-USA
Warranty:	5 years
Total Power of Luminaire (watt):	3,00
Luminous Flux of Luminaire/Lumen (lm):	390,00
Color Rendering Index (CRI):	CRI > 80
Weight:	200 gr
Box Size:	110 x 100 x 50 mm

5 YEARS WARRANTY · CE · ISO 9001:2008 · ISO 14001:2004 · F · IP20 · 220V 50-60 Hz

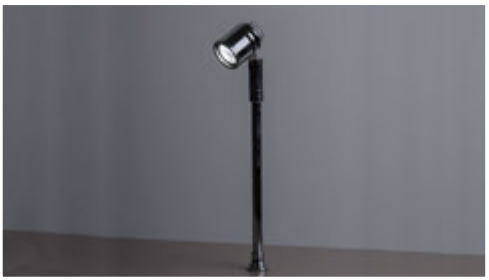

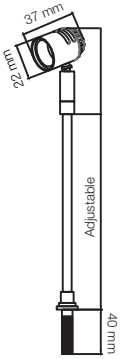

Uplight

standing and portable direct lighting

Body:	Aluminium body
Dimensions:	Ø 22 mm Any height desired
LED:	CREE-USA
Warranty:	5 years
Total Power of Luminaire (watt):	5,00
Luminous Flux of Luminaire/Lumen (lm):	650,00
Color Rendering Index (CRI):	CRI > 80
Weight:	300 gr

5 YEARS WARRANTY · CE · ISO 9001:2008 · ISO 14001:2004 · F · IP20 · 220V 50-60 Hz

Lina Opaque / Stable Profile



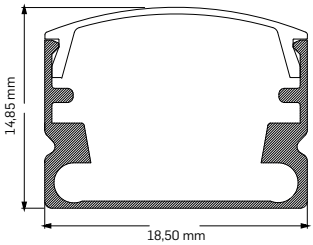

Lina Opaque
mounted direct lighting

Linear Profile

Body:	Aluminium body
Dimensions:	w: 18,50 mm x h: 14,85 mm length: any length desired
LED:	CREE-USA
Warranty:	5 years
Total Power of Luminaire per meter (watt/m):	16,70
Luminous Flux of Luminaire per meter (lm/m):	1645,00
Color Rendering Index (CRI):	CRI > 80



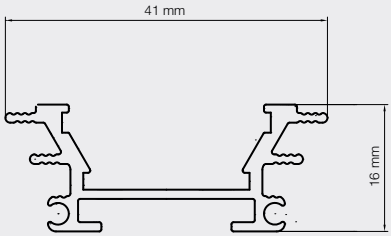

Stable Linear
mounted direct lighting

Profile

Option: Dense String

Body:	Aluminium body
Dimensions:	w: 41 mm x h: 16 mm length: any length desired
LED:	CREE-USA
Warranty:	5 years
Total Power of Luminaire per meter (watt/m):	35,00
Luminous Flux of Luminaire per meter (lm/m):	4800,00
Color Rendering Index (CRI):	CRI > 80
Weight per meter:	500 gr



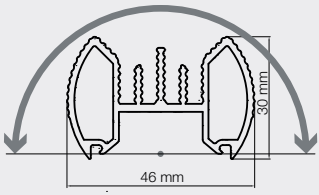

Movable Linear Profile
Dense String

flush mounted direct lighting

Body:	Aluminium body
Dimensions:	w: 46 mm x h: 30 mm length: any length desired
LED:	CREE-USA
Warranty:	5 years
Total Power of Luminaire per meter (watt/m):	50,00
Luminous Flux of Luminaire per meter (lm/m):	6870,00
Color Rendering Index (CRI):	CRI > 80
Weight per meter:	900 gr



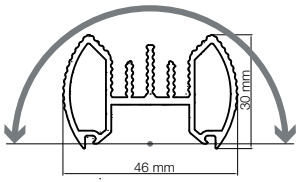

Movable Linear Profile
Standart

flush mounted direct lighting

Body:	Aluminium body
Dimensions:	w: 46 mm x h: 30 mm length: any length desired
LED:	CREE-USA
Warranty:	5 years
Total Power of Luminaire per meter (watt/m):	35,00
Luminous Flux of Luminaire per meter (lm/m):	4800,00
Color Rendering Index (CRI):	CRI > 80
Weight per meter:	900 gr

Downlight Series



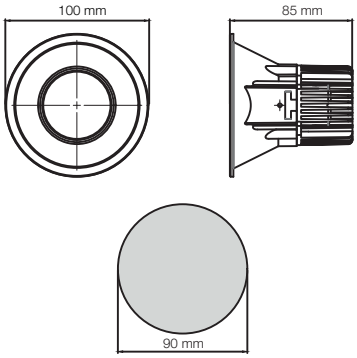

Tratt

flush mounted direct lighting

Body:	Aluminium body
Dimensions:	Ø 100 mm x 85 mm
LED:	CREE-USA
Warranty:	5 years
Total Power of Luminaire (watt):	14,00
Luminous Flux of Luminaire/Lumen (lm):	1900,00
Color Rendering Index (CRI):	CRI > 80
Inner Cutting Size:	Ø 90 mm
Weight:	300 gr
Box Size:	150 x 135 x 100 mm



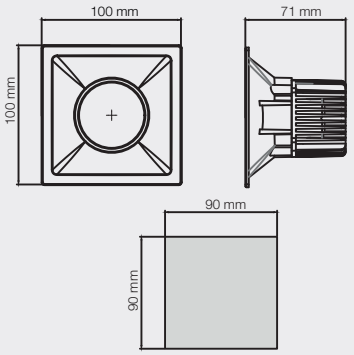

Blanda

flush mounted direct lighting

Body:	Aluminium body
Dimensions:	100 x 100 x 71 mm
LED:	CREE-USA
Warranty:	5 years
Total Power of Luminaire (watt):	14,00
Luminous Flux of Luminaire/Lumen (lm):	1900,00
Color Rendering Index (CRI):	CRI > 80
Inner Cutting Size:	90 x 90 mm
Weight:	300 gr
Box Size:	150 x 135 x 100 mm

Downlight Series

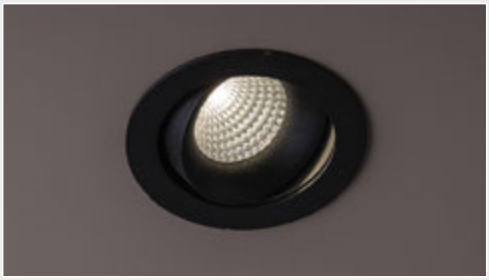

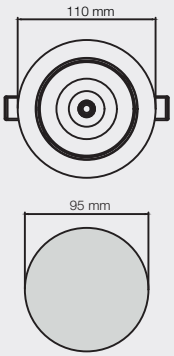

Lins

flush mounted direct lighting **Movable**

Body:	Aluminium body
Dimensions:	Ø 110 mm x 92 mm
LED:	CREE-USA
Warranty:	5 years
Total Power of Luminaire (watt):	20,00
Luminous Flux of Luminaire/Lumen (lm):	2600,00
Color Rendering Index (CRI):	CRI > 80
Inner Cutting Size:	Ø 95 mm
Weight:	700 gr
Box Size:	150 x 135 x 100 mm



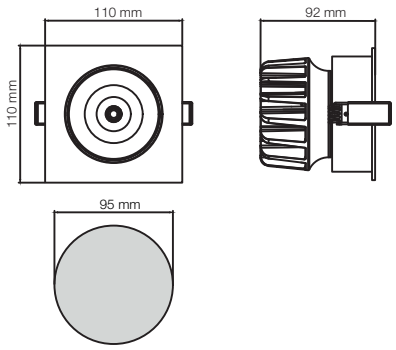

Parla

flush mounted direct lighting **Movable**

Body:	Aluminium body
Dimensions:	110 x 110 x 92 mm
LED:	CREE-USA
Warranty:	5 years
Total Power of Luminaire (watt):	20,00
Luminous Flux of Luminaire/Lumen (lm):	2600,00
Color Rendering Index (CRI):	CRI > 80
Inner Cutting Size:	Ø 95 mm
Weight:	500 gr
Box Size:	150 x 135 x 100 mm

Downlight Series



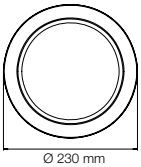

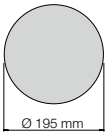

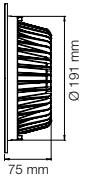

DWL8

flush mounted direct lighting

Body:	Aluminium body
Dimensions:	Ø 230 mm x 75 mm
Warranty:	5 years
Total Power of Luminaire (watt):	22,00
Luminous Flux of Luminaire/Lumen (lm):	2200,00
Beam Angle (°):	160,00
Inner Cutting Size:	Ø 195 mm
Weight:	1100 gr
Box Size:	230 x 230 x 80 mm



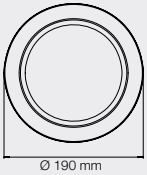

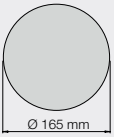

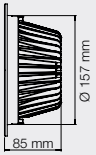

DWL6

flush mounted direct lighting

Body:	Aluminium body
Dimensions:	Ø 190 mm x 85 mm
Warranty:	5 years
Total Power of Luminaire (watt):	16,00
Luminous Flux of Luminaire/Lumen (lm):	1600,00
Beam Angle (°):	160,00
Inner Cutting Size:	Ø 165 mm
Weight:	800 gr
Box Size:	210 x 195 x 90 mm

Downlight Series





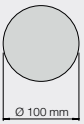

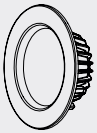

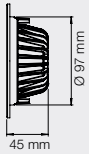

DWL4

flush mounted direct lighting

Body:	Aluminium body
Dimensions:	Ø 125 mm x 45 mm
Warranty:	5 years
Total Power of Luminaire (watt):	9,00
Luminous Flux of Luminaire/Lumen (lm):	900,00
Beam Angle (°):	160,00
Inner Cutting Size:	Ø 100 mm
Weight:	300 gr
Box Size:	140 x 130 x 60 mm

5 YEARS WARRANTY · CE · ISO 9001:2008 · ISO 14001:2004 · F · IP20 · 220V 50-60 Hz



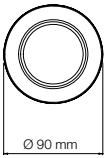

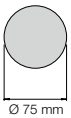

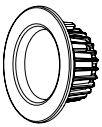

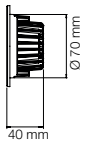

DWL3

flush mounted direct lighting

Body:	Aluminium body
Dimensions:	Ø 90 mm x 40 mm
Warranty:	5 years
Total Power of Luminaire (watt):	6,00
Luminous Flux of Luminaire/Lumen (lm):	600,00
Beam Angle (°):	160,00
Inner Cutting Size:	Ø 75 mm
Weight:	200 gr
Box Size:	110 x 105 x 55 mm

5 YEARS WARRANTY · CE · ISO 9001:2008 · ISO 14001:2004 · F · IP20 · 220V 50-60 Hz

Color Mix / Fingerlight

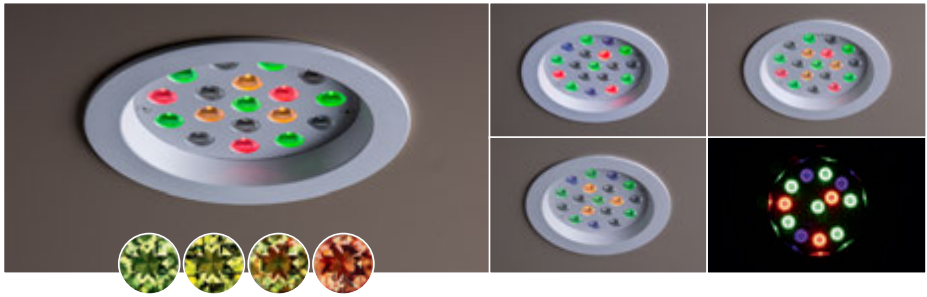

ColorMix

flush mounted direct lighting **For Zultanite® Stone**

This armature triggers and enhances all colors and sparkles of the Zultanite stone.

Body:	Aluminium body
Dimensions:	Ø 192 mm x 54 mm
LED:	CREE-USA
Warranty:	5 years
Total Power of Luminaire (watt):	34,00
Luminous Flux of Luminaire/Lumen (lm):	3780,00
Color Rendering Index (CRI):	CRI > 80
Inner Cutting Size:	Ø 165 mm

5 YEARS WARRANTY · CE · ISO 9001:2008 · ISO 14001:2004 · F · IP20 · 220V 50-60Hz



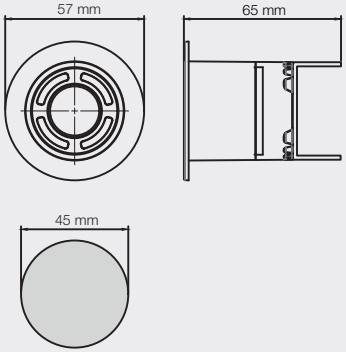

Fingerlight

flush mounted direct lighting

Body:	Aluminium body
Dimensions:	Ø 57 mm x 65 mm
LED:	CREE-USA
Warranty:	5 years
Total Power of Luminaire (watt):	4,00
Luminous Flux of Luminaire/Lumen:	650,00
Color Rendering Index (CRI):	CRI > 80
Inner Cutting Size:	Ø 45 mm
Weight:	250 gr
Box Size:	110 x 105 x 50 mm

5 YEARS WARRANTY · CE · ISO 9001:2008 · ISO 14001:2004 · F · IP20 · 220V 50-60Hz



We are lighting up
the Jewellery world
with our designs
since 2009.

Headquarter

For any inquiries or questions regarding our products and projects, please contact us:

MarkaLED Lighting

Muratpaşa Mah. Siteler Cad.
No : 2/4/2
Bayrampasa/Istanbul/TURKEY
T: +90 212 438 50 58
F: +90 212 438 50 59
E: info@markaled.com
Markaled.com

Showroom

MarkaLED Lighting Showroom

Mollafenari Mah. Vezirhan Cad.
Alibaba Turbe Sk. No : 2
Cemberlitas/Fatih/Istanbul/TURKEY
T: +90 212 674 61 11
E: info@markaled.com

MARKALED

LIGHTING FOR JEWELLERY



Lighting Up The Jewellery World with Design

MARKALED
LIGHTING FOR JEWELLERY